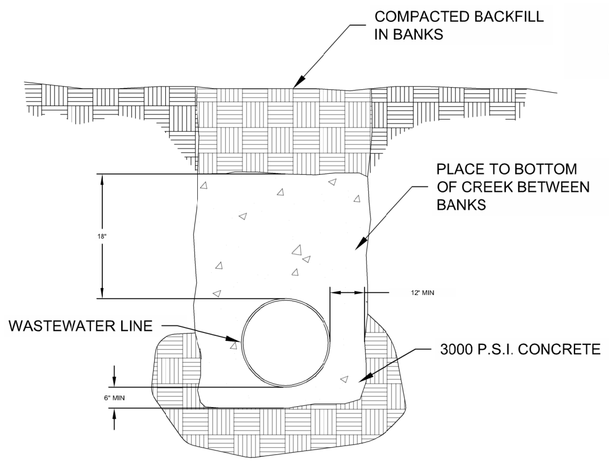

CONCRETE ENCASEMENT DETAIL
N.T.S.

IN ROW: PLACE 12" TOP SOIL TO MATCH SURROUNDING AREA IN 2 LIFTS TO 95% DENSITY

IN ROADWAYS: 8" (MIN) COMPACTED BASE +2" TYPE D HMAC.

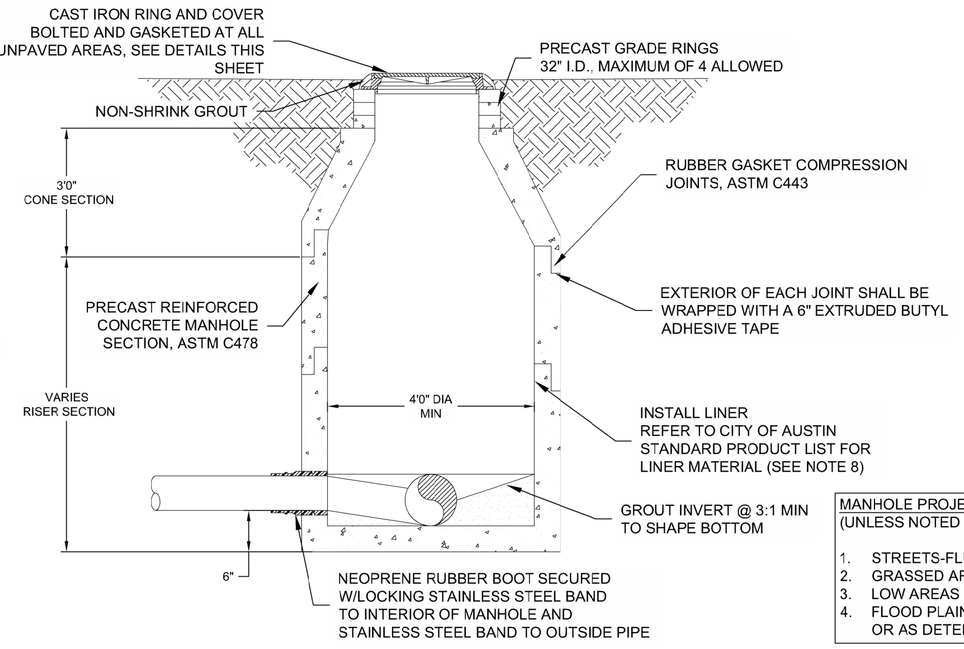

TYPICAL MANHOLE
N.T.S.

MANHOLE PROJECTION:
(UNLESS NOTED OTHERWISE ON PLANS)

1. STREETS-FLUSH.
2. GRASSED AREAS (NON - TRAFFIC) - 2" TYPICAL.
3. LOW AREAS - SEE PLANS.
4. FLOOD PLAINS AND FLOOD PRONE AREAS - 18" OR AS DETERMINED BY INSPECTOR

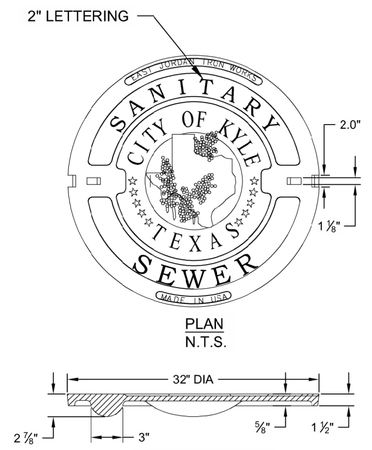

PLAN
N.T.S.

CROSS SECTION
N.T.S.

EAST JORDAN IRON WORKS
PRODUCT NO. 41432027 WITH PICK SLOT
OR PRODUCT NO. 42432008, BOLTED OR APPROVED EQUAL

MANHOLE COVER
N.T.S.

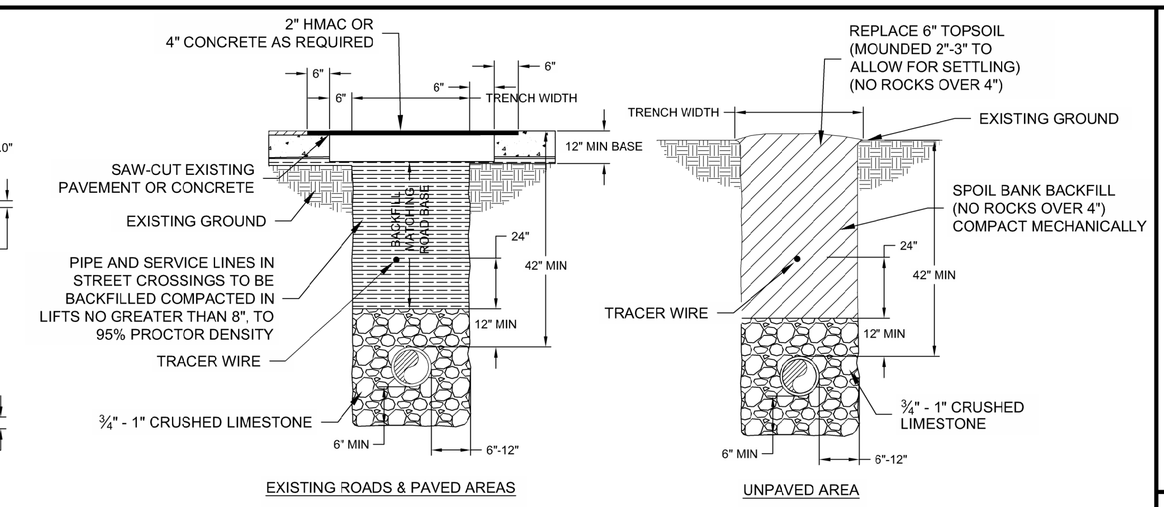

EXISTING ROADS & PAVED AREAS

UNPAVED AREA

NOTES:

1. MINIMUM DEPTH SHOULD BE 42" IN EXISTING OR PLANNED STREETS, ROADS OR OTHER TRAFFIC AREAS.
2. ROAD BASE SHALL BE REPLACED IN KIND WITH BASE THICKNESS EQUAL TO EXISTING BASE THICKNESS PLUS 3", BUT IN NO CASE LESS THAN 12".
3. REPLACEMENT REINFORCED CONCRETE SHALL BE CLASS A AND SHALL MATCH EXISTING FINISH AND THICKNESS, BUT THE THICKNESS SHALL NOT BE LESS THAN 7".
4. TRACER WIRE (CCS 12-AWG) SHALL BE INSTALLED ON ALL WATER LINES, RECLAIMED WATERLINES AND WASTEWATER FORCE MAINS. TRACER WIRE TEST STATIONS (COPPERHEAD SNAKEPIT MODEL SD14"2T-SW) SHALL ALSO BE INSTALLED AT INTERVALS NOT TO EXCEED 1,000'. PLEASE CONTACT THE CITY OF KYLE PUBLIC WORKS DEPT FOR DETAILS AND SPECIFICATIONS.

PIPELINE EMBEDMENT DETAIL
NTS

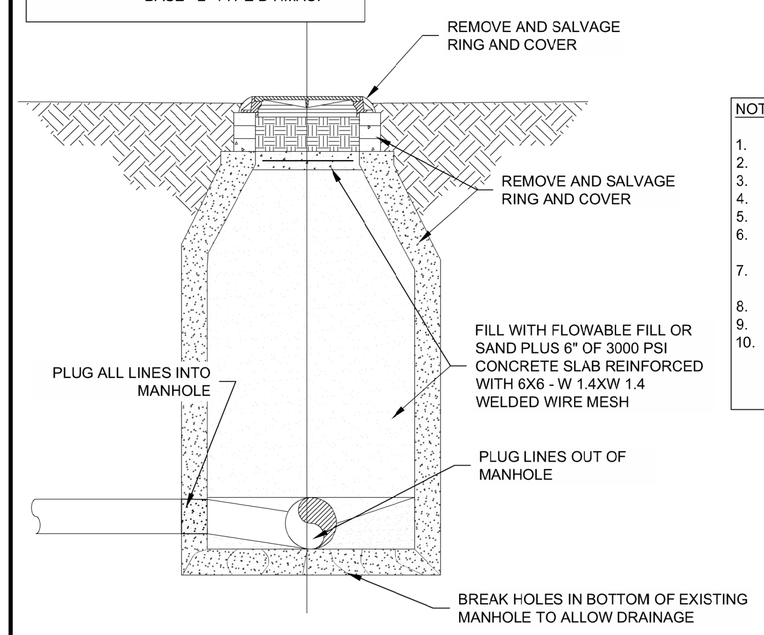

ABANDON MANHOLE
N.T.S.

NOTES:

1. CONCRETE BOTTOMS SHALL BE PRECAST WITH FLOWLINE AS SPECIFIED ON PLANS.
2. CAST-IN PLACE BOTTOMS ARE ALLOWABLE WITH PIPES 18" DIAMETER AND LARGER.
3. 5' DIAMETER MANHOLES ARE REQUIRED FOR 18" OR LARGER DIAMETER PIPELINES.
4. LINING MATERIALS SHOULD COMPLY WITH CITY OF AUSTIN PRODUCT LIST FOR LINING MATERIAL FOR WASTEWATER MANHOLES.
5. FOR MANHOLE WITH DEPTH OF 20.0' OR MORE, THE MINIMUM MANHOLE SIZE SHOULD BE 5.0' OR MORE.
6. PIPES ARE REQUIRED TO MAINTAIN MINIMUM SEPARATION OF 6" OR HALF THE DIAMETER OF LARGER DIAMETER PIPE. THE SEPARATION SHOULD BE MEASURED BETWEEN OUTSIDE WALL OF THE PIPE.
7. CITY ENGINEER MAY REQUIRE TO CHANGE THE SIZE OF THE MANHOLE DEPENDING ON FLOW PATHS, ANGLE BETWEEN PIPE ALIGNMENTS AND CONSIDERING SITE SPECIFIC CONDITIONS.
8. PUBLIC WORK INSPECTOR MAY REQUIRE LINING AT EXISTING CONNECTION MANHOLE.
9. ALL MANHOLES IN UNPAVED AREA SHOULD BE GASKETED AND BOLTED.
10. PIPELINE SETTLEMENT TEST: DURING THE INFILTRATION TEST OR AFTER THE EXFILTRATION TEST, THE PIPE WILL BE TV INSPECTED FOR POSSIBLE SETTLEMENT. WHEN AIR TESTING HAS BEEN USED, WATER SHALL BE FLOWED INTO THE PIPE TO PERMIT MEANINGFUL OBSERVATIONS. ANY PIPE SETTLEMENT WHICH CAUSES EXCESSIVE PONDING OF WATER IN THE PIPE SHALL BE CAUSE FOR REJECTION. EXCESSIVE PONDING SHALL BE DEFINED AS A GOLF BALL (15/8" DIA.) SUBMERGED AT ANY POINT ALONG THE LINE.

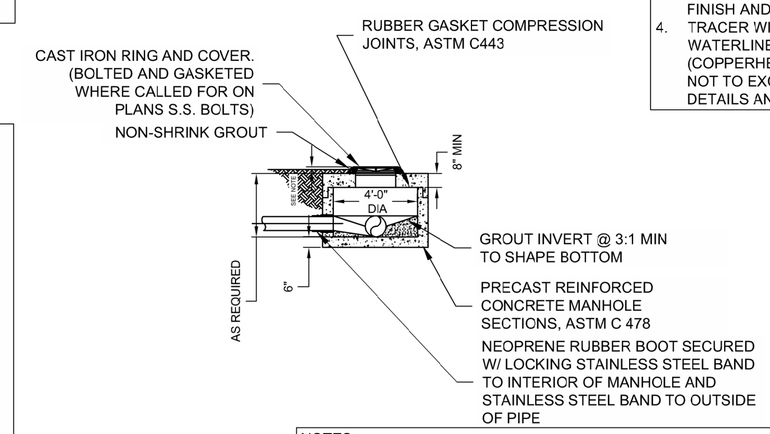

NOTES:

1. CONCRETE BOTTOMS SHALL BE PRECAST WITH FLOWLINE AS SPECIFIED ON PLANS.
2. CAST-INPLACE BOTTOMS ARE ALLOWABLE WITH PIPES 18" DIAMETER AND LARGER.
3. 5' DIAMETER MANHOLES ARE REQUIRED FOR 18" OR LARGER DIAMETER PIPELINES.
4. PIPES ARE REQUIRED TO MAINTAIN MINIMUM SEPARATION OF 6" OR HALF THE DIAMETER OF LARGER DIAMETER PIPE. THE SEPARATION SHOULD BE MEASURED BETWEEN OUTSIDE WALL OF THE PIPE.
5. CITY ENGINEER MAY REQUIRE TO CHANGE THE SIZE OF THE MANHOLE DEPENDING ON FLOW PATHS, ANGLE BETWEEN PIPE ALIGNMENTS AND CONSIDERING SITE SPECIFIC CONDITIONS.

FLAT - TOP MANHOLE
N.T.S.

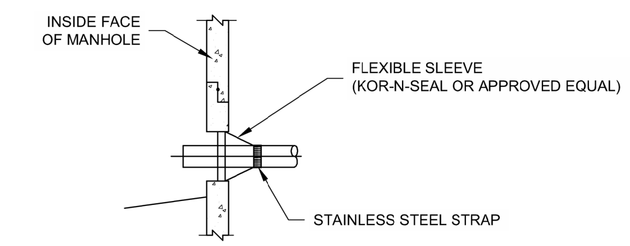

NOTES:

1. CONNECTIONS MADE INTO EXISTING MANHOLES ARE TO BE CORED AND NOT DRILLED/ CHISELED.
2. CONNECTION TO EXISTING MANHOLES SHALL BE INSPECTED BY CITY OF KYLE.
3. CONNECTION DETAILS FOR PIPE SIZE OTHER THAN SPECIFIED REQUIRED TO OBTAIN PRE APPROVAL FROM CITY ENGINEER.

NEW PIPE TO EXISTING MANHOLE CONNECTION DETAIL - 4" TO 24"
N.T.S.

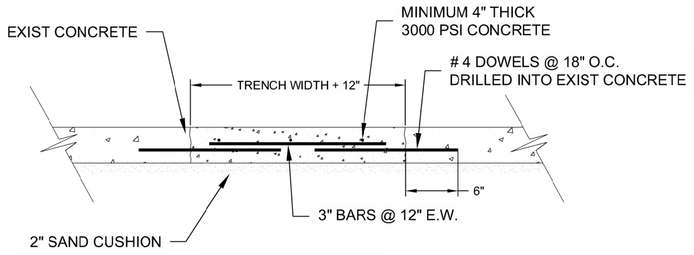

CONCRETE REPAIR
N.T.S.

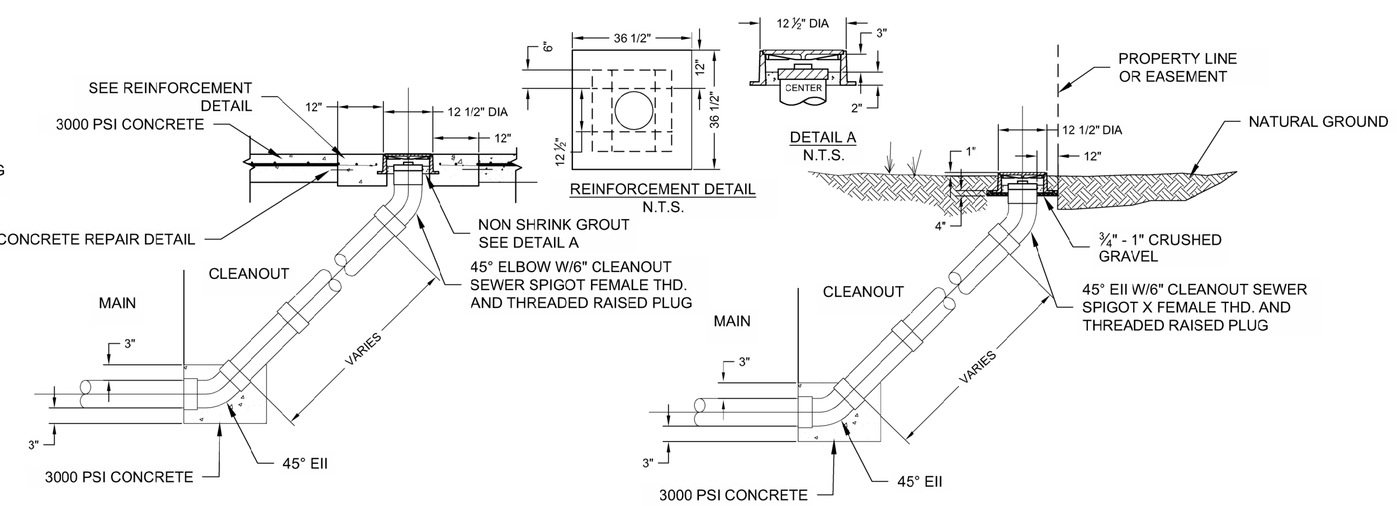

SEWER MAIN CLEANOUT IN PAVEMENT
N.T.S.

SEWER MAIN CLEANOUT
N.T.S.

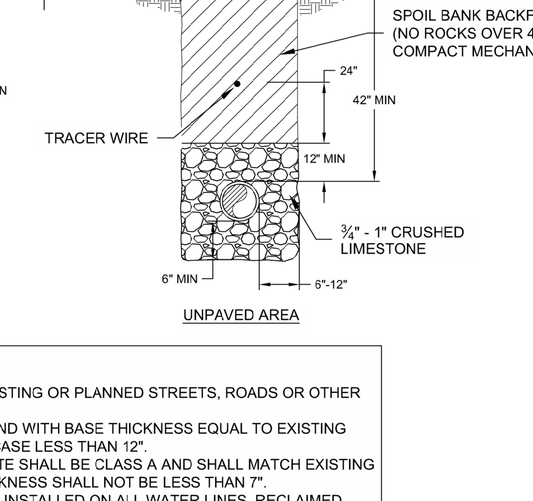

PLAN
N.T.S.

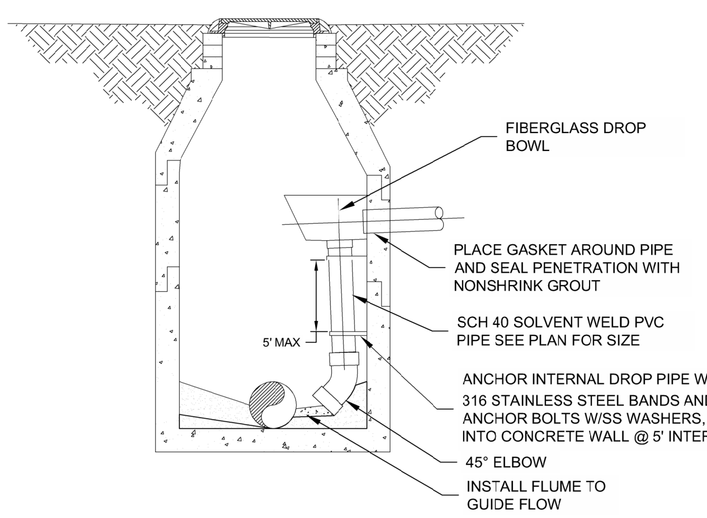

NOTES:

FORCE MAIN SHALL NOT USE DROP MANHOLE EXCEPT OTHERWISE REQUIRED OR APPROVED BY CITY ENGINEER.

INTERIOR DROP PIPE DETAIL
N.T.S.

SEWER MAIN CLEANOUT
N.T.S.

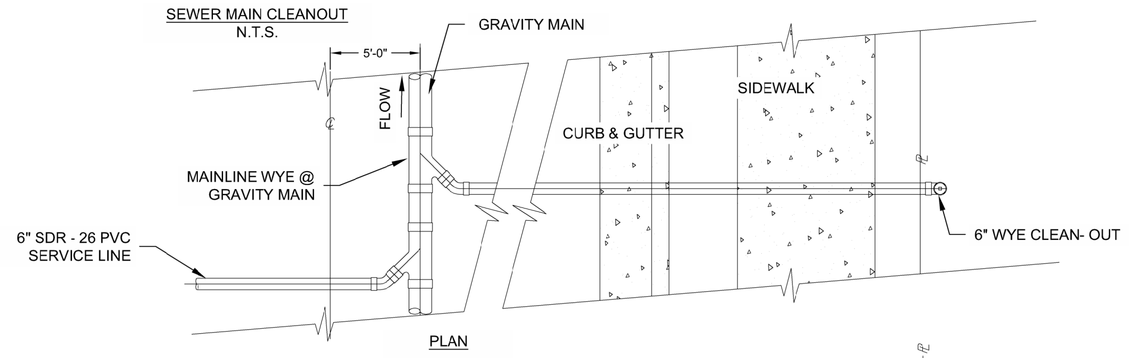

PLAN

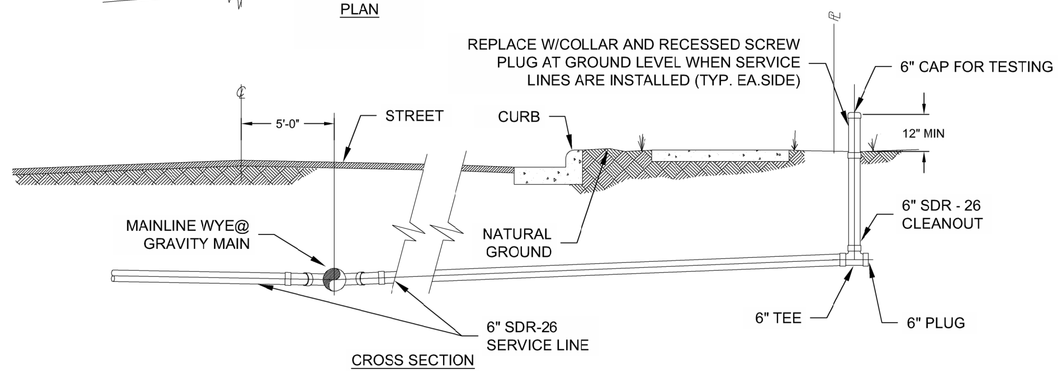

CROSS SECTION

WASTEWATER SERVICE CONNECTION
N.T.S.

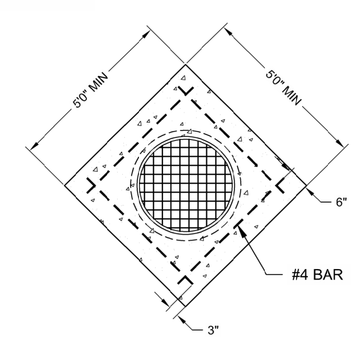

CONCRETE MANHOLE COLLAR
N.T.S.

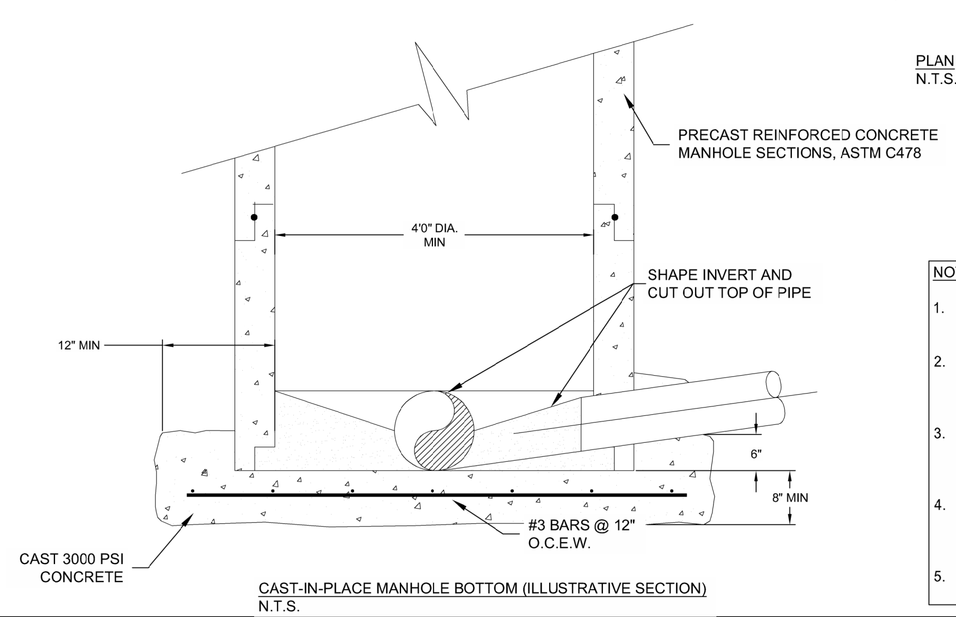

CAST-IN-PLACE MANHOLE BOTTOM (ILLUSTRATIVE SECTION)
N.T.S.

NOTES:

1. INVERT CHANNELS TO BE CONSTRUCTED FOR SMOOTH FLOW WITH NO OBSTRUCTIONS.
2. SPILLWAYS SHALL BE CONSTRUCTED BETWEEN PIPES WITH DIFFERENT INVERT ELEVATIONS PROVIDING FOR SMOOTH FLOW.
3. INTERIOR DROP MUST BE PROVIDED FOR DROP OF GREATER THAN 24 INCHES. USE " INTERIOR DROP PIPE DETAIL" FOR CONSTRUCTION.
4. CHANNELS FOR FUTURE CONSTRUCTIONS (STUBS) SHALL BE CONSTRUCTED, FILLED WITH SAND, AND COVERED 1" MORTAR.
5. CORING EXISTING MANHOLE MUST MATCH EXISTING TROUGHS.

CITY OF KYLE
ENGINEERING DEPARTMENT
100 W CENTER STREET
KYLE, TX 78640
PH (512) 262-3965

STANDARD WASTEWATER DETAILS

CITY OF KYLE
ENGINEERING DEPARTMENT
100 W CENTER STREET
KYLE, TX 78640
PH (512) 262 1010

DATE	ISSUE/REVISION
04/15/2016	1ST ISSUE
FEB /2018	2ND ISSUE
SEPT /2018	3RD ISSUE
AUGUST /2020	5TH ISSUE

PROJECT NO.	XXXXX
DATE	AUGUST, 2020
DRAWN BY	KG
CHECKED BY	LB
SHEET DESCRIPTION	CITY OF KYLE STANDARD WASTEWATER DETAILS
SHEET NUMBER	DT - 2