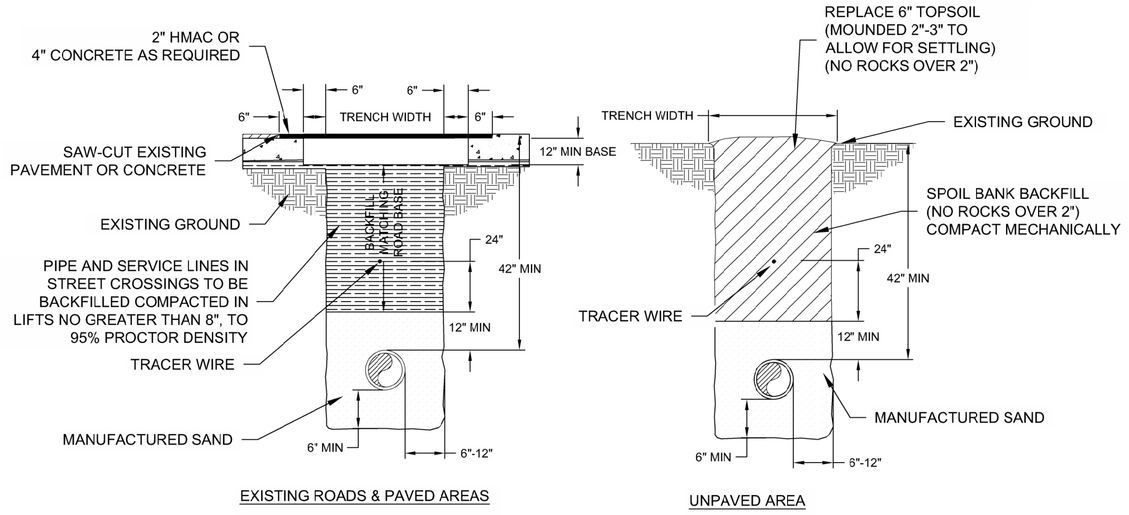

EXISTING ROADS & PAVED AREAS

UNPAVED AREA

NOTES:

1. MINIMUM DEPTH SHOULD BE 42" IN EXISTING OR PLANNED STREETS, ROADS OR OTHER TRAFFIC AREAS.
2. ROAD BASE SHALL BE REPLACED IN KIND WITH BASE THICKNESS EQUAL TO EXISTING BASE THICKNESS PLUS 3", BUT IN NO CASE LESS THAN 12".
3. PRESSURE RATING OF THE PIPES TO BE C 900 FOR PIPE SIZE UPTO 12" AND C 905 FOR PIPE SIZE GREATER THAN 12".
4. TRACER WIRE (CCS 12-AWG) SHALL BE INSTALLED ON ALL WATER LINES, RECLAIMED WATERLINES AND WASTEWATER FORCE MAINS. TRACER WIRE TEST STATIONS (COPPERHEAD SNAKEPIT MODEL SD14"2T-SW) SHALL ALSO BE INSTALLED AT INTERVALS NOT TO EXCEED 1,000'. PLEASE CONTACT THE CITY OF KYLE PUBLIC WORKS DEPT FOR DETAILS AND SPECIFICATIONS.

PIPELINE EMBEDMENT DETAIL
NTS

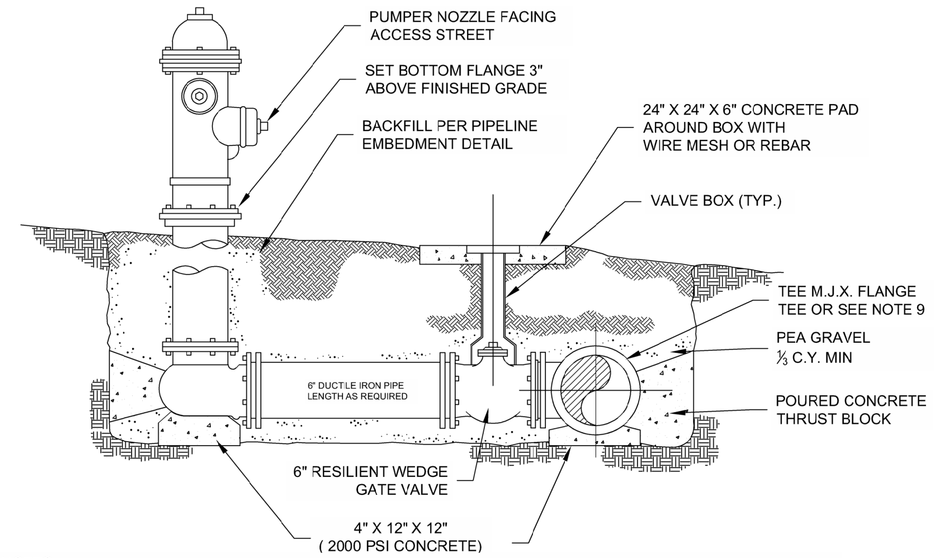

NOTES:

1. A 3 FOOT CLEAR SPACE SHALL BE MAINTAINED AROUND THE CIRCUMFERENCE OF FIRE HYDRANTS EXCEPT AS OTHERWISE REQUIRED OR APPROVED.
2. FIRE HYDRANT SHALL BE INSTALLED ON SAME SIDE OF ROAD AS WATER MAIN UNLESS APPROVED BY CITY ENGINEER OR PUBLIC WORKS DIRECTOR .
3. FIRE HYDRANT SHALL BE INSTALLED PLUMB AND TRUE.
4. ALL FIRE HYDRANT EXTERIOR SHALL BE FACTORY PRIMED AND PAINTED RED USING A HIGH GRADE ENAMEL.
5. BELL AND THRUST BLOCKS TO REST IN UNDISTURBED SOIL.
6. FOR ACCEPTABLE FIRE HYDRANTS SEE CITY OF AUSTIN STANDARD PRODUCT LIST.
7. ALL METALLIC PIPES AND FITTINGS SHALL BE WRAPPED WITH 8 MIL POLYETHYLENE FILM.
8. ENSURE ALL BOLTS ARE UNOBSTRUCTED BY CONCRETE.
9. M.J.X. SWIVEL MAY BE REQUIRED BASED ON PROJECT SPECIFIC SITE CONDITION.
10. PRIVATELY OWNED AND MAINTAINED FIRE HYDRANTS SHALL BE PAINTED SILVER.

FIRE HYDRANT ASSEMBLY
NTS

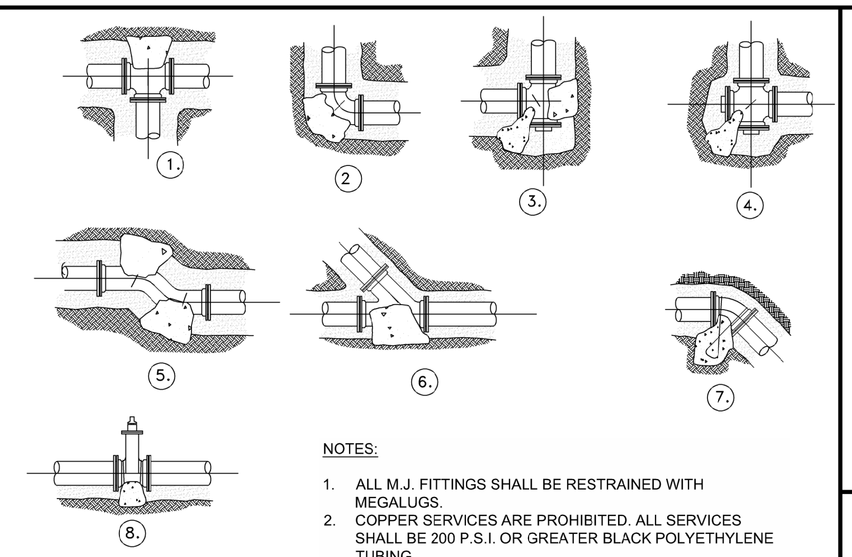

NOTES:

1. THRU LINE CONNECTION, TEE
2. DIRECTIONAL CHANGE, ELBOW
3. DIRECTIONAL CHANGE, TEE USED AS ELBOW
4. DIRECTIONAL CHANGE, CROSS USED AS ELBOW
5. DIRECTIONAL CHANGE
6. THRU LINE CONNECTION
7. DIRECTION CHANGE VERTICAL, BEND ANCHOR
8. VALVE ANCHOR

NOTES:

1. ALL M.J. FITTINGS SHALL BE RESTRAINED WITH MEGALUGS.
2. COPPER SERVICES ARE PROHIBITED. ALL SERVICES SHALL BE 200 P.S.I. OR GREATER BLACK POLYETHYLENE TUBING.
3. ALL BRASS FITTINGS SHALL CONFORM TO U.S. PUBLIC LAW 111-380 ("REDUCTION OF LEAD IN DRINKING WATER ACT")
4. WRAP ALL METALLIC FITTINGS WITH 8 MIL. POLYETHYLENE IN ACCORDANCE WITH ANSI/AWWA A 21.5/ C 105.
5. REFER CITY OF AUSTIN STANDARD DETAILS (STANDARD NO. 510-6) FOR DIMENSION AND DESIGN OF THRUST BLOCKS. FOR ALL OTHER CONDITION THAN IT IS SPECIFIED IN STANDARD DETAILS, SIZE OF THRUST BLOCKS MUST BE COMPUTED AND APPROVED BY ENGINEER.
6. ENSURE ALL BOLTS ARE UNOBSTRUCTED BY CONCRETE.

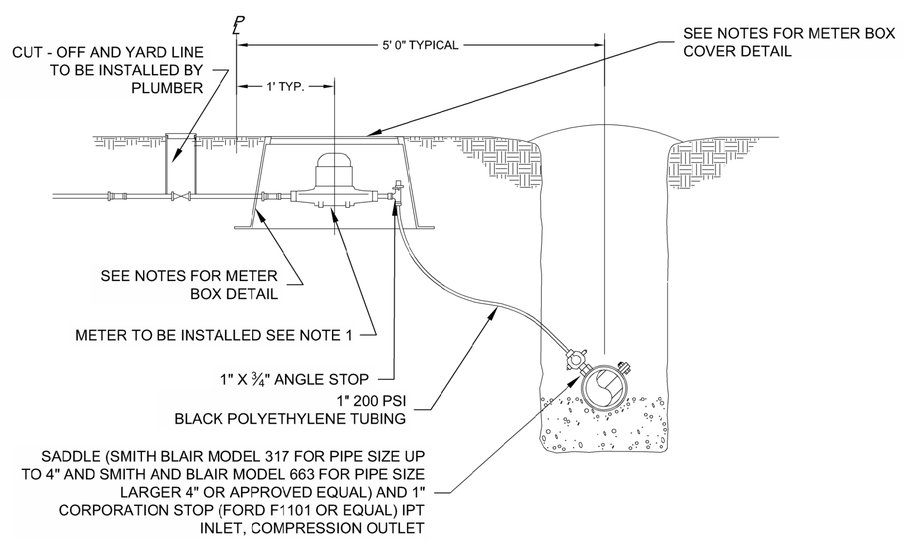

NOTES:

1. SINGLE 1" OR SMALLER METER - EAST JORDAN METER BOX MODEL # 34P14 (LID MODEL # NPR14 - 914 A).
2. DUAL 1" OR SMALLER METER - EAST JORDAN METER BOX MODEL # R65 DOUBLE (LID MODEL # NPR14 - 941C).
3. 1.5" AND 2" METERS - EAST JORDAN METER BOX MODEL # 32417300 (LID MODEL # 32131774A01).
4. 2" METER TO BE INSTALLED BY CITY. 3" METER COORDINATE WITH CITY OF KYLE PUBLIC WORKS DIRECTOR.

METER SETTING DETAIL
NTS

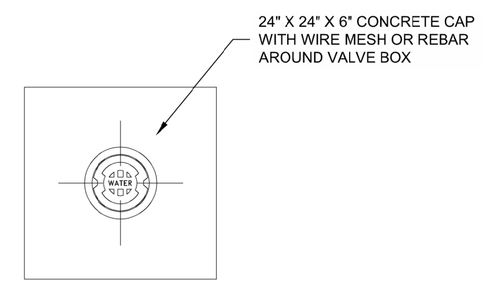

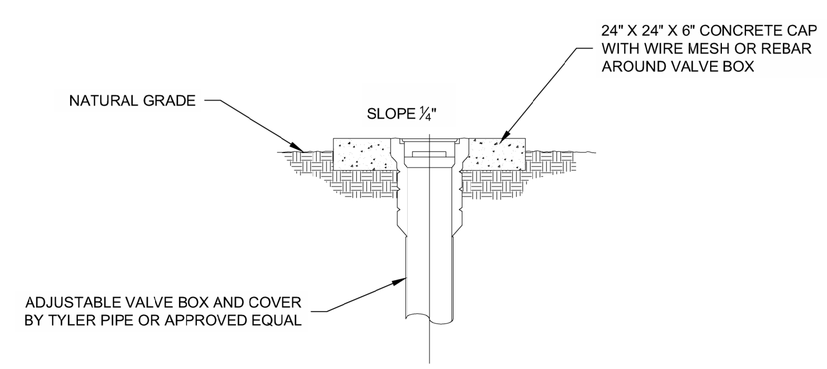

GATE VALVE & BOX DETAILS
NTS

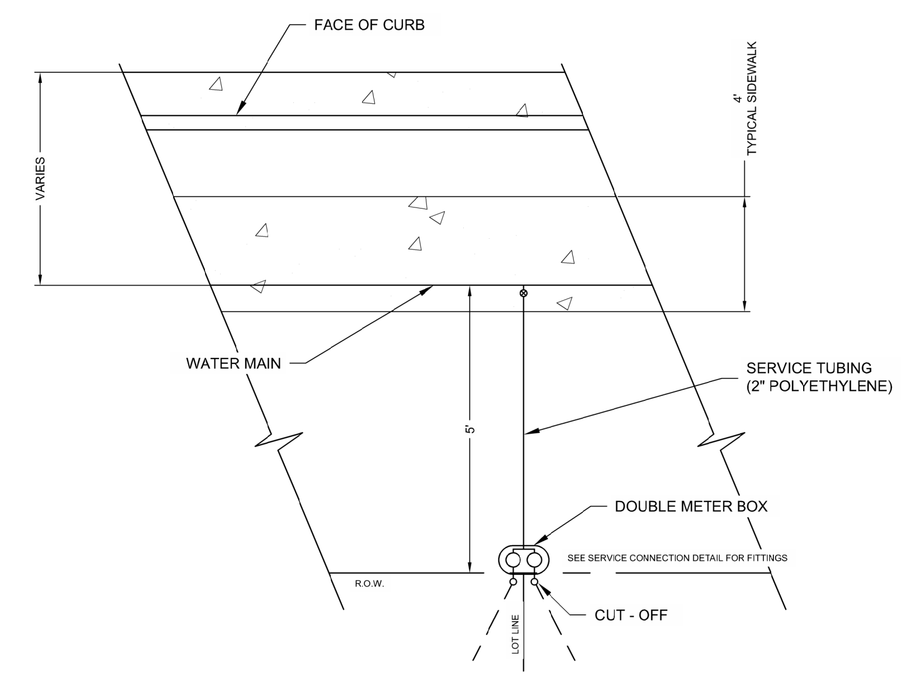

TYPICAL WATER SERVICE PLAN
NTS

NOTES:

1. DRY AND WET UTILITIES SHOULD NOT BE LOCATED AT SAME LOT LINE.

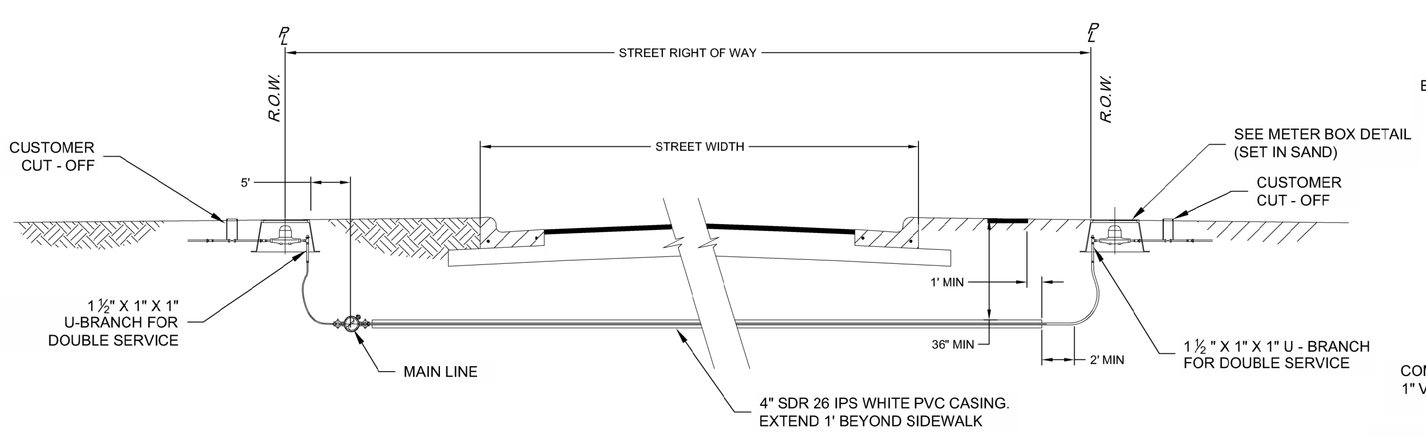

NOTES:

1. CASING MUST EXTEND AT LEAST 1' BEYOND SIDEWALK.
2. PIPING MUST GO 2' BEFORE VERTICAL BEND.

SHORT SIDE AND LONG SIDE SINGLE SERVICE:

1. 1" DOUBLE STRAP SERVICE SADDLE, SMITH BLAIR OR APPROVED EQUAL.
2. 1" CORPORATION STOP, MUELLER OR APPROVED EQUAL.
3. 1" 200 PSI POLYETHYLENE TUBING
4. 4" SDR 26 IPS WHITE PVC CASING (LONG SIDE SERVICE ONLY)
5. 1" X ¾" ANGLE STOP VALVE (LOCKING WING TYPE)
6. ALL BRASS FITTING.

SHORT SIDE AND LONG SIDE DOUBLE SERVICE:

1. 1 1/2" DOUBLE STRAP SERVICE SADDLE, SMITH BLAIR OR APPROVED EQUAL.
2. 1 1/2" CORPORATION STOP, MUELLER OR APPROVED EQUAL.
3. 1 1/2" 200 PSI POLYETHYLENE TUBING
4. 4" SDR 26 IPS WHITE PVC CASING (LONG SIDE SERVICE ONLY)
5. 1½" X 1" X 1" U - BRANCH (COMPRESSION FITTINGS)
6. 2 - 1" X ¾" ANGLE STOP VALVE (LOCKING WING TYPE)
7. ALL BRASS FITTING.

METER SETTING DETAIL
NTS

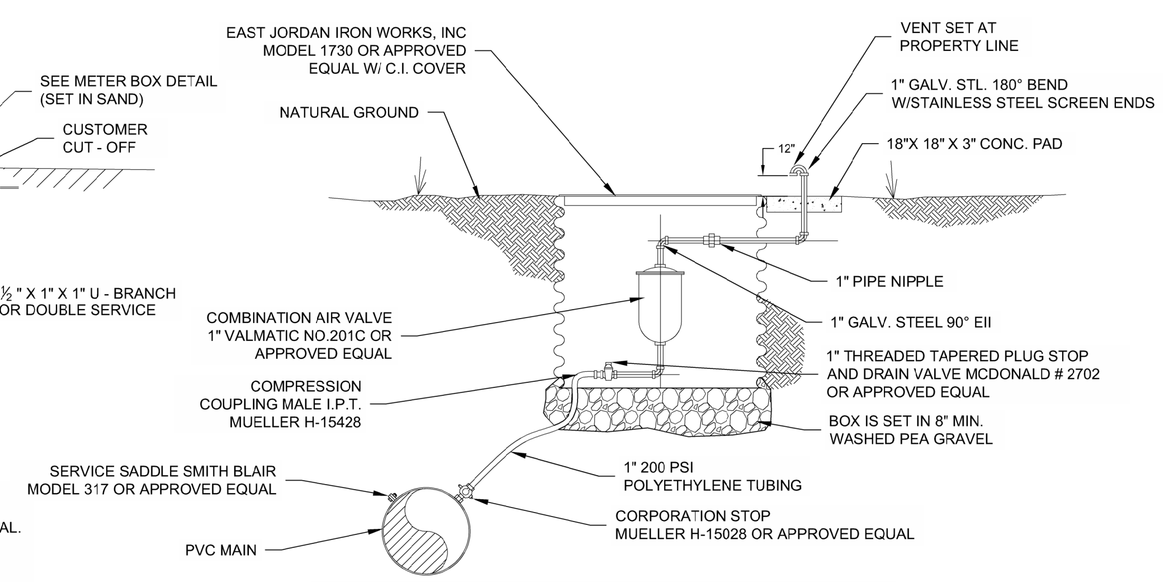

NOTES:

1. COMBINATION AIR VALVES SHALL BE LOCATED AS PER PLANS AT THE HIGHEST POINT OF THE LINE.

COMBINATION AIR VALVE
NTS

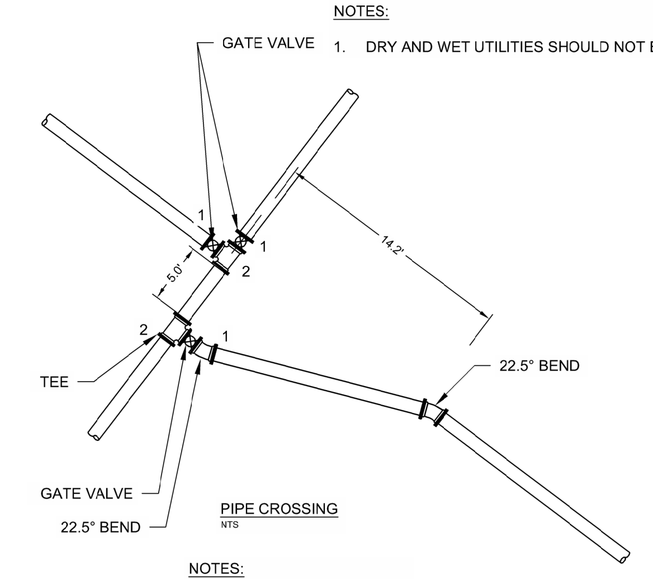

PIPE CROSSING
NTS

NOTES:

1. MJ - MECHANICAL JOINT.
2. FL - FLANGE.

CITY OF KYLE
ENGINEERING DEPARTMENT
100 W CENTER STREET
KYLE, TX 78640
PH (512) 262-3965

STANDARD WATER DETAILS

CITY OF KYLE
ENGINEERING DEPARTMENT
100 W CENTER STREET
KYLE, TX 78640
PH (512) 262 1010

DATE	ISSUE/REVISION
04/15/2016	1ST ISSUE
FEB, 2018	2ND ISSUE
DEC, 2019	3RD ISSUE

PROJECT NO.	XXXXX
DATE	MAY, 2020
DRAWN BY	KG
CHECKED BY	LB
SHEET DESCRIPTION	CITY OF KYLE STANDARD WATER DETAILS
SHEET NUMBER	DT - 1